78

7E4172

Roll No. _____ [Total No. of Pages : 7

7E4172

B.Tech. VII Semester (Main/Back) Examination - 2013

Electrical Engg.

7EE2 Power System Analysis

Time : 3 Hours

Maximum Marks : 80
Min. Passing Marks : 24

Instructions to Candidates:

*Attempt any **five** questions, selecting **one** question from each **unit**. All questions carry **equal** marks. (Schematic diagrams must be shown wherever necessary. Any data you feel missing suitably be assumed and stated clearly. Units of quantities used/calculated must be stated clearly.)*

Unit - I

1. a) What is per unit system? How are the base quantities selected? What are the advantages of per unit system?

b) A 90 MVA, 11 KV, 3-∅(Phase), generator has a reactance of 25%. The generator supplies two motors through transformers and transmission line as shown in Fig.1. Transformer T_1 is a 3 phase X_{mer}, 100 MVA, 10/132 KV, 6% reactance. Transformer T_2 is composed of 3 single phase units each rated 30 MVA, 66/10 KV, 5% reactance. Motors are rated 50 MVA, and 40 MVA both 10 KV and 20% reactance. Taking generator rating as base draw reactance diagram and indicate reactances in per unit. The reactance of line is 1000 hms. **(8,8)**

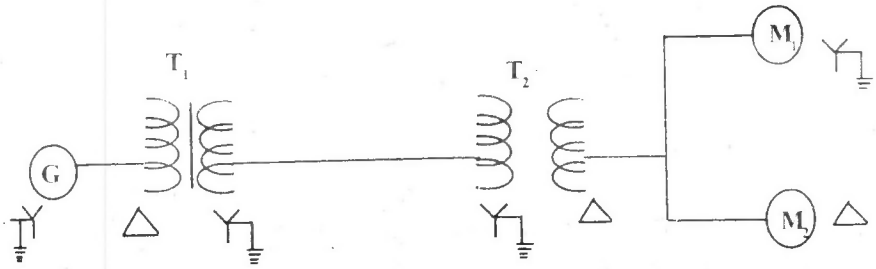

Fig. 1

a)

OR

1. a) Enumerate the different types of buses in power system. What parameters ar specified on these buses?

b) Fig. 2 shows a 4 bus system. The shunt admittances at the buses are negligible The line impedances are as below.

Line (Bus to bus)	1-2	2-3	3-4	1-4
R(pu)	0.025	0.02	0.05	0.04
X(pu)	0.10	0.08	0.20	0.16

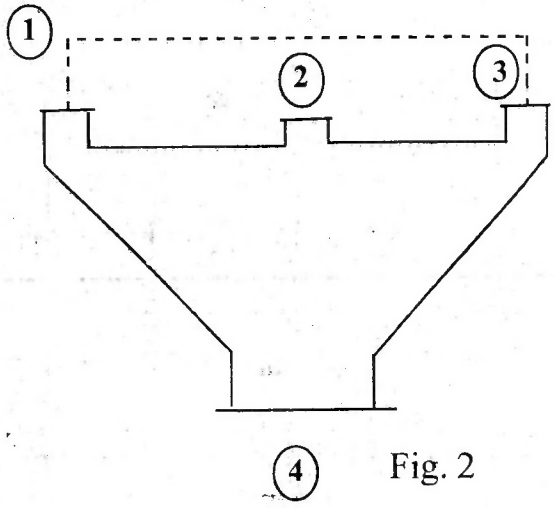

Fig. 2

i) Assume that the line shown dotted (from bus 1 to bus 3) is not present. Formulate Y_{Bus} matrix.

ii) Which element of the Y_{Bus} obtained above are affected when the line from bus 1 to 3 is added? (The new line has no mutual coupling with other lines) If the p. u impedance of this line is 0.1+j 0.4. Find new Y_{Bus} matrix **(4,12)**

2. a) Discuss the analysis of short circuit on a loaded synchronous machine and draw models for computing subtrarient current, trarient current etc. (8)

b) The plant capacity of a 3-∅ generating station consists of two 10,000 KVA generator of reactance 18%. The generators are connected to the station bus-bars from which load is taken through three 5000 KVA step-up transformers each having a reactance of 5%. Determine the maximum fault MVA which the circuit breakers on i)Low voltage side and ii)High voltage side may have to deal with single line diagram is shown in Fig.3 **(8)**

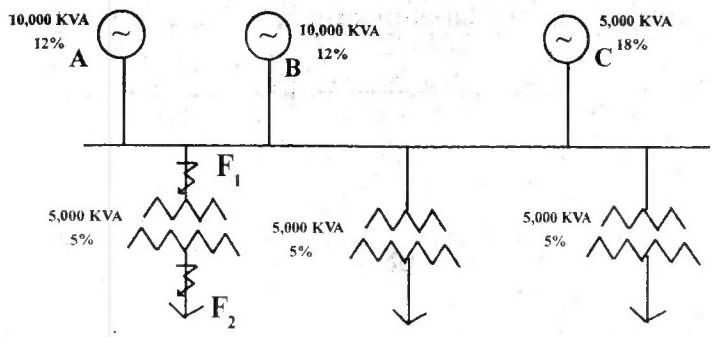

Fig. 3

2. a) Draw equivalent ckts of synchronous m/c under sub trarient, trarient and steady state conditions. **(6)**

b) A small generating station has two alternators each of 5000 KVA and 8% reactance. The circuit breakers (on outgoing feeders) are rated at 150 MVA. This system is to be extended by taking supply from a grid via a 10,000 KVA transformer having negligible resistance and 7.5% reactance. If the same circuit breakers are to be used find the reactance (in ohms) which should be placed between the bus bar section of generating station and the supply from grid. The generation voltage of the station is three-phase 3.3 KV **(10)**

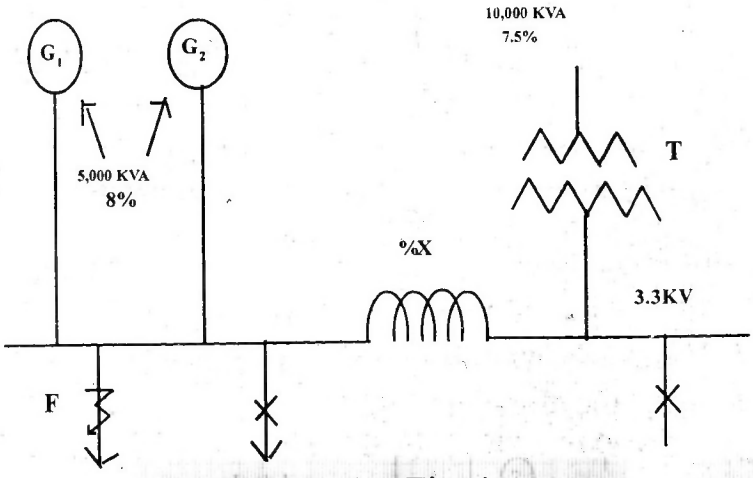

Fig. 4

Unit - III

3. a) What are symmetrical components? Explain clearly with the help of vector diagrams the positive, negative and zero sequence quantities. **(8)**

b) An unbalanced star-connected three-phase supply having negligible internal impedance is connected to three identical voltmeters in star connections. Each voltmeter has a resistance of 10,000 ohms and negligible Reactance. The supply voltages of the three-phases from line-to-neutral are respectively $E_R=100\underline{|0^o}$, $E_Y=200\underline{|270^o}$, $E_B=100\underline{|120^o}$.

Using the method of symmetrical components determine the reading of the voltmeter connected to the yellow line. **(8)**

OR

3. An 11 KV, 100 MVA, alternator with solidity grounded neutral has positive sequence and negative sequence reactance of 0.2 pu each and zero sequence reactance of 0.05 pu. It is supplying an 11 KV, 50 MVA motor with positive and negative reactance

of 0.2 pu and zero sequence reactance of .05 pu through a short line. The neutral of the motor is also solidly grounded. The transmission line has positive and negative sequence reactance of 0.05 pu and zero sequence reactance of 0.15 pu on 100MVA base. The motor is drawing 40 MW, at 0.8 pf leading with terminal voltage of 10.95 KV when a single line to ground fault occurs at the generator terminals of phase a. calculate total current in the phase a of generator and motor under fault condition. **(16)**

Unit - IV

4. a) For Analog Filter Design explain Butter worth filter with a suitable diagram?

4. a) Derive necessary equation to determine fault current for a line to line fault through a fault impedance of Z_f. Draw the diagram showing interconnection of sequence networks. **(8)**

b) A balanced star connected load takes 90A from a balanced 3 phase, 4 wire supply. If the fuses in Y and B phases are removed, find the symmetrical Components of the line currents_

i) before the fuses are removed

ii) after the fuses are removed. **(8)**

OR

4. Two 11 KV, 50MVA, 3 phase alternators are connected in parallel. Each alternates has a reactance to positive, negative and zero sequence, currents of 0.6 ohms, 0.40 ohms and 0.20 ohms respectively, and has its neutral earthed through a resistance of 0.2 ohm. The alternators supply a substation through a feeder having impedances

of 0.4+j 0.7 ohm to positive and negative sequence currents and 0.7+j 3.0 ohms to zero sequence currents.

A double line to ground fault occurs at the substation. Calculate

a) The fault currents,

b) Potential above ground attained by alternator neutrals. **(16)**

5. a) Derive the static load flow equations and define clearly the conditions and assumptions made in obtaining these equations **(8)**

b) Discuss the Newton Raphson method for load flow study in brief and derive various Jacobian matrix elements. **(8)**

OR

5. a) Discuss the Fast decoupled method with assumptions and obtain the final form of it.

b) Fig. 5 shows the one line diagram of a simple 3 bus system with generators at buses 1 and 3. The magnitude of voltage at bus 1 is adjusted to 1.05 p.u. voltage magnitude at bus 3 is fixed at 1.04 pu with a real power generation of 200MW. A load consisting of 400 MW and 250 M_{var} is taken from bus 2. Line impedances are marked in per unit.On a 100 MVA base, and the line changing susceptances are neglected. Obtain the power flow solution by the fast decoupled method. (Only one iteration).

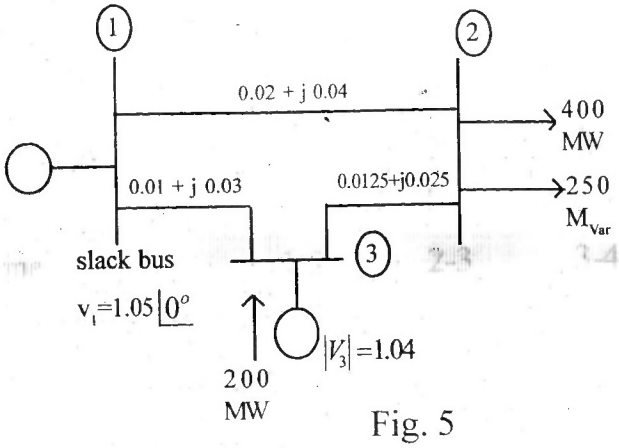
1
2
0.02 + j 0.04
400
MW
0.01 + j 0.03
0.0125+j0.025
250
M_{Var}
slack bus
3
$v_1=1.05\angle 0^o$
$|V_3|=1.04$
200
MW

Fig. 5

85

7E4174

Roll No. _____ [Total No. of Pages : 2

7E4174

B.Tech. VII Semester (Main/Back) Examination - 2013
Electrical Engg.
7EE4 Utilization of Electrical Power

Time : 3 Hours **Maximum Marks : 80**
Min. Passing Marks : 24

Instructions to Candidates:

*Attempt any **five** questions, selecting **one** question from each **unit**. All questions carry **equal** marks. (Schematic diagrams must be shown wherever necessary. Any data you feel missing suitably be assumed and stated clearly. Units of quantities used/calculated must be stated clearly.)*

Unit - I

1. a) Explain principle of dielectric heating? Derive the mathematical expression of power consumed in such process. Also state application of dielectric heating. **(8)**

   b) What are the requirements of good heating elements? Discuss the causes of its failures. **(8)**

OR

1. What is electric welding? Also explain about welding transformer and its effective use? **(8)**

   b) Explain Construction, Operation, performance and application of induction furnace. **(8)**

Unit - II

2. a) A hall 30 m long and 15 m wide with a ceiling height of 5 meters is to be provided with a general illumination of 120 lumen/m^2. Taking a coefficient of utilization of 0.5 and depreciation factor of 1.42. Determine the number of fluorescent tube required, their spacing, mounting height and total wattage. Take luminous efficiency of fluorescent tube as 40 lumens/watt for 80 w tube. **(8)**

   b) Compare the metal filament lamp with discharge lamp. What is the advantage of coiled coil? Describe principle of operation, construction and working of mercury vapour lamp. **(8)**

OR

2. a) What is polar curves? Explain it, also compare fluorescent and incandescent lamp. **(8)**

b) The front of a building 45 m× 20 m is illuminated by 1000 w lamp arranged so that uniform illumination on the surface is obtained. Assuming a luminous efficiency of 18 lumen/watt, coefficient of utilization 0.4, waste light factor 1.2 and depreciations factor 1.3 determine the illumination on the surface. **(8)**

Unit - III

3. a) State various types of power supplies used for electrolytic process. Discuss any one in detail. **(8)**

b) Explain electroextraction and electro plating how its performed? **(8)**

OR

3. a) What is the principle of electrodeposition? State and explain the factors on which the quantity of electrodeposition depends. **(8)**

b) Explain manufactures of chemicals and anodizing in electrolytic process. **(8)**

Unit - IV

4. a) Discuss merits and demerits of the single phase A.C. system for main and suburban line electrification of the railways. **(8)**

b) Discuss the suitability of D.C. series motor for its application in electric locomotive for traction duty. **(8)**

OR

4. a) Compare the speed - torque characteristics of cumulatively - compounded D.C. motor and a 3-phase slipring induction motor. **(8)**

b) Explain briefly about sub - station equipment and layout, also describe pantograph. **(8)**

Unit - V

5. a) Enlist the major components of electric locomotive and state their functions. **(8)**

b) A schedule speed of 45 km/h is required between two stop 1.5 km apart. Find the max speed over the run if the stop is of 20 sec. duration. The values of acceleration and retardation are 2.4 km/h/s and 3.2 km/h/s respectively. Assume a simplified trapezoidal speed - time curve. **(8)**

OR

5. a) Discuss various method of electric braking for traction motors. **(8)**

b) An electric train has an average speed of 42 km/h on a level track between stop 1400 apart . Its accelerated at 1.7 km/h/s and is braked at 3.3 km/h/s. Draw the speed time curve for the run. **(8)**

87

7E4177

Roll No. _____ [Total No. of Pages : 2

7E4177

B.Tech. VII Semester (Main) Examination - 2013
Electrical Engg.
7EE6.2 Computer Aided Design of Electrical Machines

Time : 3 Hours

Maximum Marks : 80
Min. Passing Marks : 24

Instructions to Candidates:

*Attempt any **five** questions, selecting **one** question from each **unit**. All questions carry **equal** marks. (Schematic diagrams must be shown wherever necessary. Any data you feel missing suitably be assumed and stated clearly. Units of quantities used/calculated must be stated clearly.)*

Unit - I

1. a) Explain the basic principles of electrical Machine Design with specifications and factor's affecting the size and rating. **(10)**

   b) Write and explain the ohm's law for magnetic circuit. **(6)**

OR

1. a) Define and explain the terms specific electric loading and specific Magnetic loading as applied to an electromagnetic machine. **(10)**

   b) Write short note on rest and apparent flux density. **(6)**

Unit - II

2. Explain and derive equation for mean temperature rise of an electrical machine during its intermittent operation, short ratings and continuous ratings. **(16)**

OR

2. Explain and Derive the equation for temperature rise of an electrical machines during its heating also write and explain heat dissipation and heat flow equations. **(16)**

88

Unit - III

3. a) Explain the difference between a power and distribution transformer from the design and working principles considerations. **(10)**

   b) Describe the optimization concepts of transformer's. **(6)**

OR

3. Differentiate following:

   a) Square and stepped core.

   b) Core and Yoke cross sections. **(8×2)**

Unit - IV

4. a) Explain and derive an expression for the output coefficient of an alternator. **(8)**

   b) What is the difference between Turbo and Hydro alternator's? Explain in detail. **(8)**

OR

4. a) Write and explain the short circuit ratio and its effect in a Hydro alternator in detail. **(8)**

   b) Explain the design of stator core and winding? Also describe rotor design. **(8)**

Unit - V

5. Explain the following parameters regarding Induction motor:

   a) Output Equation

   b) Design Criteria

   c) Main Dimension

   d) Specific Loading **(4×4=16)**

OR

5. a) Explain the design and working of stator core with suitable diagrams. **(8)**

   b) Discuss air gap length and winding of I.M. **(8)**

89

7E4173

Roll No. _____ [Total No. of Pages : 2

7E4173

B.Tech. VII Semester (Main/Back) Examination - 2013
Electrical Engg.
7EE3 Artificial Intelligence Techniques

Time : 3 Hours **Maximum Marks : 80**
Min. Passing Marks : 24

Instructions to Candidates:

*Attempt any **five** questions, selecting **one** question from each **unit**. All questions carry **equal** marks. (Schematic diagrams must be shown wherever necessary. Any data you feel missing suitably be assumed and stated clearly. Units of quantities used/calculated must be stated clearly.)*

Unit - I

1. a) Explain why Artificial Intelligence is beneficial even though computers cannot really think. How is it different from the conventional computer systems? **(8)**

   b) What are the major factor's that can help push Artificial Intelligence from the laboratory to the real world. **(8)**

OR

1. a) How do Expert Systems differ from conventional programs? Discuss the various stages of knowledge acquisition in Expert Systems. **(8)**

   b) What are the various expert system tools? Differentiate between a shell and a tool. **(8)**

Unit - II

2. a) Define and describe the difference between knowledge, belief, hypothesis and data. **(6)**

   b) Describe the various Logic Representation schemes used to frame knowledge-based programs or Rule-based-expert systems. **(10)**

OR

2. a) What is Heuristic search? Explain the Admissible Heuristic algorithm with the help of a suitable example. **(8)**

   b) What do understand by Depth First search? Explain the DFS algorithm with a suitable example. Also explain the term complexity of DFS. **(8)**

Unit - III

3. a) Compare the performance of a computer and that of a biological neural network in terms of speed of processing, size and complexity, storage, fault tolerance and control mechanism. **(8)**

b) What do you understand by single layer and multilayer perception? Discuss perception training algorithms in brief. **(8)**

OR

3. a) Explain the basic principal and some recent trends in Artificial Neural Networks. **(8)**

b) Explain briefly the terms cell body, axon, synapse, dendride and neuron with reference to a biological neural network and explain how it can be used for Artificial Neural Network. **(8)**

Unit - IV

4. a) Compare and contrast between supervised and unsupervised learning in connection with Artificial Neural Network. Identify supervised and unsupervised basic learning laws. **(8)**

b) Explain the Kohonen's Algorithm and its application in Artificial Neural Networks. **(8)**

OR

4. a) What are the basic features for the derivation of Back propagation Algorithm in Input, Output and Hidden layers? **(8)**

b) Derive the back propagation algorithm along with the proper expressions and block diagram. **(8)**

Unit - V

5. a) Explain Fuzzy logic using the concepts of its existence in the real world. **(8)**

b) What do you understand by the fuzzy set. Differentiate it from the conventional set theory. **(8)**

OR

a) What are the basic organizations for a genetic algorithm. **(8)**

b) Define the membership function of fuzzy set using appropriate examples. Also describe the basic terms and conditions for it. **(8)**

7E4175

Roll No. _____ [Total No. of Pages : 3

7E4175

B.Tech. VII Semester (Main/Back) Examination-2013
Electrical Engineering
7EE5 Power System Engineering

Time : 3 Hours **Maximum Marks : 80**

Min. Passing Marks : 24

Instructions to Candidates:

*Attempt any **five** questions. Selecting **one** question from each **unit**. All questions carry **equal** marks. (Schematic diagrams must be shown wherever necessary. Any data you feel missing suitably be assumed and stated clearly. Units of quantities used/calculated must be stated clearly.)*

UNIT - I

1. a) Prove that the incremental rate curve intersects the heat rate curve at its minimum value. **(8)**

b) Discuss different type of system constraints in detail. **(8)**

OR

1. a) Describe the dynamic programming solution for unit commitment. **(8)**

b) A system consists of two plants connected by a transmission line as shown in figure. The load is at plant 2. The transmission line loss calculations reveal that a transfer of 100 MW from plant 1 to plant 2 means a loss of 15 MW. Find the required generation at each plant for $\lambda = 60$. Assume that the incremental cost of the two plants are given by:

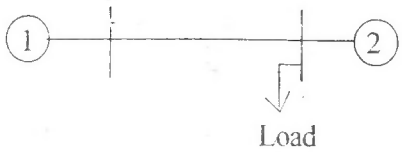

$$\frac{dC_1}{dP_1} = 0.2P_1 + 22 \text{ Rs./MW-hr}$$

$$\frac{dC_2}{dP_2} = 0.15P_2 + 30 \text{ Rs./MW-hr}$$ **(8)**

UNIT - II

2. a) Distinguish between steady state, transient and dynamic stability. **(6)**

b) In the system shown in figure, a three phase static capacitive reactor of reactance 1pu per phase is connected through a switch at motor bus bar. Calculate the limit of steady state power with and without reactor switch closed. Assume the internal voltage of the generator to be 1.2 pu and that of the motor to be 1.0 pu. **(10)**

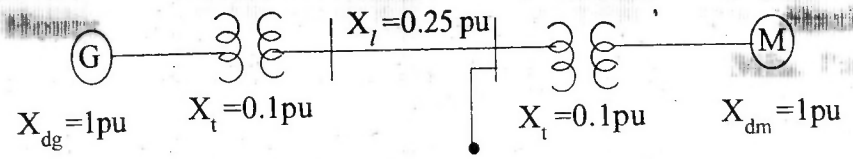

OR

2. a) Find the steady state power limit of a system consisting of a generator equivalent reactance 0.5pu connected to an infinite bus through a series reactance of 1.0 pu.. The terminal voltage of the generator is held at 1.2pu and the voltage of the infinite bus is 1.0 pu. **(10)**

b) What conditions are to be satisfied for stable operation of a generation? **(6)**

UNIT - III

3. a) Find out equation for critical cleaning angle if an auto reclose circuit breaker is used in a system having two transmission lines in parallel and a fault occurs at the mid point of one of the parallel lines. **(8)**

b) For the system shown in figure, both the terminal voltage and infinite bus voltage are 1.0pu and the generator is delivering 1.0pu power. Calculate the critical clearing angle and the critical clearing time when the system is subjected to a 3-phase fault at point p(middle of the line) as shown in figure Let H = 5MJ/MVA.

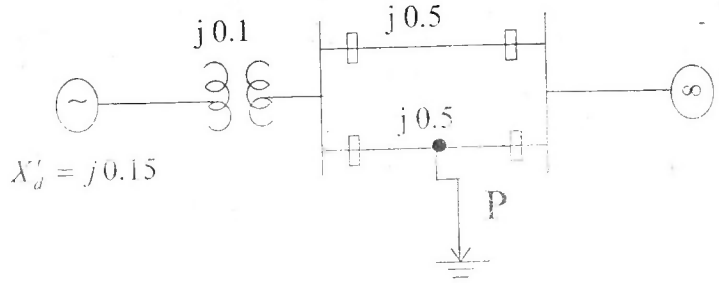

(8)

OR

3. a) What are the factors which affect power system stability and methods to improve stability **(6)**

b) In the system shown in figure, the generator is delivering 1 pu power the voltage behind transient reactance is 1.05 pu and infinite bus voltage in 1 pu the number on the diagram are the pu reactance on a common system bus. Calculate s_{cr} and t_{cr} when the system is subjected to a 3ϕ fault of point p. Take H = 5 MJ/MVA and f = 50Hz.

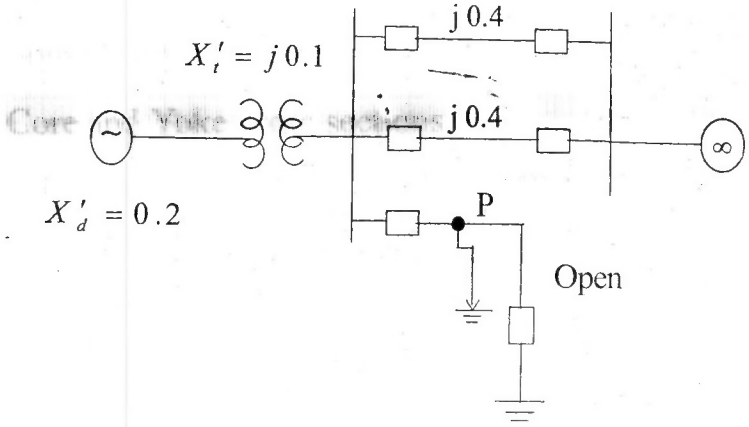

(10)

UNIT - IV

4. a) What are the advantages and disadvantages of interconnected power system. **(8)**

b) Why reserve capacity is required at generating stations? What are the various types of reserve capacities used in power systems? **(8)**

OR

4. a) What are the types of excitation system? Draw the functional block diagrams of them and briefly describe the various elements of the block diagrams. **(8)**

b) Write short notes on power system interconnection in India. **(8)**

UNIT - V

5. a) Explain voltage instability problem in power system. **(8)**

b) Explain working and uses of phase shifting transformer **(8)**

OR

5. a) What are the different methods of voltage control in a power system? Explain the working of an on load tap changing transformer with the help of a diagram. **(8)**

b) Write a short note on power system security. **(8)**

94

7E4171

Roll No. _____ [Total No. of Pages : 2

7E4171

B.Tech. VII Semester (Main/Back) Examination - 2013

Electrical Engg.

7EE1 Data Base Management System

Time : 3 Hours **Maximum Marks : 80**

Min. Passing Marks : 24

Instructions to Candidates:

*Attempt any **five** questions, selecting **one** question from each **unit**. All questions carry **equal** marks. (Schematic diagrams must be shown wherever necessary. Any data you feel missing suitably be assumed and stated clearly. Units of quantities used/calculated must be stated clearly.)*

Unit - I

1. a) Explain Architecture of DBMS in detail. **(8)**

   b) What is ER model? Discuss concept of weak and strong entity sets with suitable example. **(8)**

OR

1. a) Discuss concept of specialization & generalization. **(8)**

   b) Explain concept of primary, candidate, alternate, super and foreign key with example. **(8)**

Unit - II

2. Explain the purpose of Normalization? Define and discuss 2-NF and 3-NF with example. **(16)**

OR

2. a) Explain significance of data abstraction **(6)**

   b) Explain fundamental operations of Relational Algebra with suitable example. **(10)**

Unit - III

3. Consider the following relation.

Movie (m-id, Name, Director, Year)

Person (pan-no, Name, Occupation, Age)

Spectator (m-id, Pan-no)

Write SQL queries given below

i) List Name & Director of movie where spectator's occupation is "student"

ii) List Pan-no, Name & age of viewers who are spectator for all movies directed by "satyjit Ray." **(8×2)**

OR

3. a) State the difference between views and tables in SQL with the help of suitable queries. **(8)**

b) Write and explain a typical trigger in SQL **(8)**

Unit - IV

4. a) Explain the advantages of ordered files over unordered files. **(8)**

b) State the difference between static & Dynamic files **(8)**

OR

4. a) How does multilevel Indexing improve the efficiency of searching an Index file. **(8)**

b) How can Hashing be used to construct an Index? **(8)**

Unit - V

5. Write short notes on following:

a) Log based Recovery Technique

b) Concurrency control (8×2)

OR

a) Properties of Transaction.

b) Deadlock detection and Remedies (8×2)