26

Total No of Pages: 4

6E3109

Roll No. _____

6E3109

B.Tech. VI Sem. (Main & Back) Exam. May/June 2013

Electrical Engg.

6EE 1 Modern Control Theory

Time: 3 Hours

Maximum Marks: 80

Min. Passing Marks: 24

Instructions to Candidates:

*Attempt any **five questions,** selecting **one question** from **each unit.** All questions carry **equal** marks. Schematic diagrams must be shown wherever necessary. Any data you feel missing suitably be assumed and stated clearly.*

Units of quantities used/calculated must be stated clearly.

Use of following supporting material is permitted during examination.

1._____ 2._____

UNIT – I

Q.1. Define the following.

(i) Linearity [3]

(ii) Relaxedness [3]

(iii) Time Invariance [3]

(iv) Causality [3]

(v) Linear vector space linear Independence [4]

OR

Q.1. (a) Derive the solution of homogeneous state equation. [8]

(b) Consider the homogeneous equation.

$AX = 0$

Where $A = \begin{pmatrix} 0 & 1 & 1 & 2 & -1 \\ 1 & 2 & 3 & 4 & -1 \\ 2 & 0 & 2 & 0 & 2 \end{pmatrix}$

Find the linearly independent solution of this equation. [8]

UNIT – II

Q.2. (a) What are the advantages and disadvantages of state space analysis. [8]

(b) Draw the free body diagram and write the differential equation of the mechanical system shown in figure 1 [8]

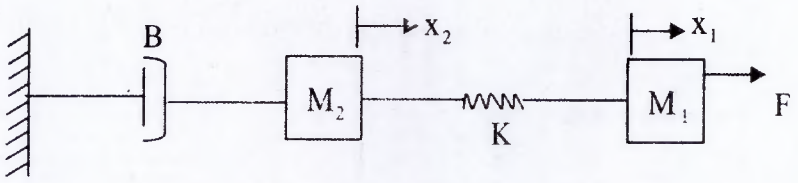

Figure 1

OR

Q.2. (a) What are state variables? Give the advantages of modern control theory over conventional control theory. [8]

(b) For the system shown in figure 2, choose the state variable as v_1 (t) and v_2 (t) and write down the state equation.

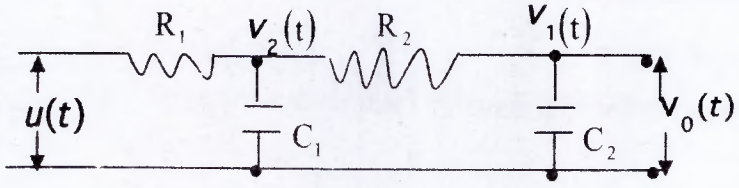

Figure 2 [8]

UNIT – III

Q.3. (a) Explain the procedure to convert a given state model into signal flow graph. [8]

(b) Obtain the transfer function if state model is given by.

$$\begin{bmatrix} \dot{x}_1 \\ \dot{x}_2 \end{bmatrix} = \begin{bmatrix} 0 & 1 \\ -2 & -3 \end{bmatrix} \begin{bmatrix} x_1 \\ x_2 \end{bmatrix} + \begin{bmatrix} 0 \\ 1 \end{bmatrix} u$$

$$Y = \begin{bmatrix} 1 & 0 \end{bmatrix} \begin{bmatrix} x_1 \\ x_2 \end{bmatrix}$$ [8]

OR

Q.3. (a) Explain cascade and parallel decomposition in brief. [6]

(b) Construct the state model in Jordan's canonical form for a system whose transfer is given by

$$\frac{Y(s)}{x(s)} = \frac{10}{(s+1)^2(s+2)}$$ [10]

UNIT – IV

Q.4. (a) Define diagonalization ? Explain its importance in modern control theory. [8]

(b) Define the following:

(i) Eigen values (ii) Eigen vectors

(ii) State of a system (iv) State transition matrix [8]

OR

Q.4. (a) State the duality between controllability and Observability. [8]

(b) Consider the state equation.

$$\begin{bmatrix} \dot{x}_1(t) \\ \dot{x}_2(t) \end{bmatrix} = \begin{bmatrix} 0 & 1 \\ -2 & -3 \end{bmatrix} \begin{bmatrix} x_1(t) \\ x_2(t) \end{bmatrix} + \begin{bmatrix} 0 \\ 1 \end{bmatrix} u(t)$$

Obtain the state transition matrix. [8]

UNIT – V

Q.5. (a) What are the properties of z- transform? Find the relationship between z and s domain. [8]

(b) Find the z- transform of $\{u_n\}$ where

$$\{u_n\} = \begin{cases} 4^n & \text{if } n < 0 \\ 3^n & \text{if } n \geq 0 \end{cases}$$ [8]

OR

Q.5. (a) What is sampling process? Write short note on digital PID controller. [8]

(b) Find the z- transform of the following. [8]

(i) $\dfrac{a}{(s+a)^2}$ (ii) $e^{-at} \sin \omega t$

By using the property of z- transform.

80

6E3110

Roll No. _____ Total No of Pages: 3

6E3110

B. Tech VI Sem. (Main / Back) Exam. May/June 2013
Electrical Engg.
6EE 2 High Voltage Engineering

Time: 3 Hours **Maximum Marks: 80**

Min. Passing Marks: 24

Instructions to Candidates:

*Attempt any **five questions,** selecting **one question** from **each unit.** All questions carry **equal** marks. Schematic diagrams must be shown wherever necessary. Any data you feel missing suitably be assumed and stated clearly.*

Units of quantities used/calculated must be stated clearly.

Use of following supporting material is permitted during examination.

1._____ 2._____

UNIT – I

Q1. (a) Discuss "Treeing and Tracking Breakdown" in solids. [8]

(b) Explain "cavitations and Bubble theory'' in context with breakdown in liquids.[8]

OR

Q1. (a) Define Townsend's first and second ionization Coefficients. How is the condition for breakdown obtained in a Townsend discharge? [8]

(b) Explain the phenomena of electrical conduction in liquids. How does it differ from that in gases? [8]

UNIT – II

Q2. (a) Explain different schemes for cascade connection of transformers for producing very high AC Voltages. [8]

(b) Give the Marx circuit arrangement for multistage impulse generators. [8]

OR

Q2. (a) Why is a Cockcroft – Walton circuit preferred for voltage multiplier circuit? Explain its working with schematic diagram. [8]

(b) Give the expression for ripple and regulation in voltage multiplier circuits. How are the ripple and regulation minimized? [8]

UNIT – III

Q3. (a) What are partial discharges and how are they detected under power frequency operating conditions? [8]

(b) What are "broad band" and "narrow band" detectors? What is the sensitivity in each of the above detectors? [8]

OR

Q3. (a) Explain the high voltage Schering Bridge for the tan δ and capacitance measurement of insulators or bushings. [8]

(b) The volume resistivity of a Bakelite piece was determined by using standard circular electrodes, a sensitive galvanometer and stabilized power supply. When the applied voltage was 1000V, the galvanometer deflection with the specimen was 3.2cm. When a standard resistance of $R_S = 10M\Omega$ is used for calibration, the deflection was 33.30cm with a universal shunt ratio of 3,000. The diameter of the electrodes is 10cm, and the thickness of the specimen is 2mm. Find the volume resistivity. [8]

82

UNIT – IV

Q4. (a) What are the mechanism by which lighting strokes develope and induce over – voltage on overhead power lines? [8]

(b) Explain the terms "attenuation and distortion" of travelling waves propagating on overhead lines. [8]

OR

Q4. Explain reflection and refraction of waves for following:

(i) Open circuited line

(ii) Short circuited line

(iii) Line terminated through a resistance

(iv) Line terminated through a capacitance. [4x4=16]

UNIT – V

Q5. Explain various types of lighting arresters in detail. [16]

OR

Q5. Write short notes on the following: -

(i) Coordination of insulation levels.

(ii) Operation of ground wires. [8+8=16]

83

6E3111

Roll No. _____ Total No of Pages: 4

6E3111

B.Tech VI Sem. (Main & Back) Exam., May. 2013

Electrical Engg.

6EE 3 Protection of Power Systems

Time: 3 Hours **Maximum Marks: 80**

Min. Passing Marks: 24

Instructions to Candidates:

*Attempt any **five questions,** selecting **one question** from **each unit.** All questions carry **equal** marks. Schematic diagrams must be shown wherever necessary. Any data you feel missing suitably be assumed and stated clearly.*

Units of quantities used/calculated must be stated clearly.

Use of following supporting material is permitted during examination.

(Mentioned in form No. 205)

1._____ 2._____

UNIT – I

Q.1. (a) Explain what are primary protection and back-up protection? Discuss the remote back-up protection by Simple time graded relays. [8]

(b) Explain the following Scheme's with basic requirement of protection system, used in Circuit Breakers.

(i) Trip circuit with relay of make type contact.

(ii) Trip circuit with relay of brake type contact. [8]

OR

Q.1. (a) Describe the transient errors in current Transformer. [8]

(b) A particular bar type current transformer has 300 secondary turns. The secondary winding carries a burden of ammeter having resistance of 1Ω and inductive reactance of 0.53Ω, while secondary winding resistance is 0.25 Ω and reactance 0.35 Ω. The magnetising mmf. required is 85A; while current component for core losses is 50A, Find [8]

(i) The primary current when secondary carries 5A.

(ii) The ratio error.

(iii) The reduction in the number of turns of secondary to obtain zero ratio error.

UNIT – II

Q.2. (a) Explain with the help of neat sketch, the principle, construction and working of directional induction type overcurrent relay. [8]

(b) The current rating of an overcurrent relay is 5A. It has PMS=2; TSM=0.3, CT ratio is 400/5; fault current = 4000A. Determine the time of operation of the relay assuming normal IDMT characteristics. [8]

PSM	2	4	5	8	10	20
Operating Time (s)	10	5	4	3	2.8	2.4

OR

Q.2. (a) To use the directional relay what are the conditions to be satisfied? Explain briefly. [7]

(b) Describe the combined "Current and time" grading protective scheme of overcurrent relays. How the protection of ring-main feeder is provided by directional and non-directional over current relay. [9]

85

UNIT – III

Q.3. (a) Draw and Explain the Merz-Price protection of Alternator Stator Winding - State its advantages. [7]

(b) Explain, with the aid of neat diagram of connections, the principle of operations of current balance type differential protection of generator against earth and inter phase fault [9]

OR

Q.3. (a) Which are the various abnormal running conditions which may exist in generator? What are their effects and how these effects can be minimized? [9]

(b) Why restricted earth fault protection is provided to alternators through it leaves a portion of winding unprotected against earth fault. Justified? [7]

UNIT – IV

Q.4. (a) State and Explain the Various possible faults in transformer. Why the faults are less in transformer than the generators? [7]

(b) Describe with the help of a neat diagram the connections of differential protection of transformer. A 3-phase 33/6.6 KV star/delta connected transformer is protected by differential system. The CT's on LT side have a ratio of 300/5. Show that the CT's on HT side will have a ratio $60:5\sqrt{3}$. [9]

OR

Q.4. (a) Explain the Buchholz relay with reference to [7]

(i) Principle of operation

(ii) Installations.

(iii) Difficulties.

(iv) Merits.

(v) Limitations.

86

(b) Draw neat circuit diagram showing high impedance three-phase bus bar differential protection and what are the difficulties encountered in their protection?

UNIT – V

Q.5. (a) Explain how an impedance relay is used for distance protection, obtain its operating characteristics. Draw its operating characteristics on R-X diagram. [8]

(b) Explain with diagram the working principle of MHO relay. Deduce the torque equation of the same. [8]

OR

Q.5. (a) Describe the scheme for single phasing protection of Induction Motor. [6]

(b) Explain abnormal conditions and possible failure of induction Motors. [5]

(c) What is phase reversal? What is its effect? How it is prevented in induction Motors. [5]

18.5.13
VI Sem

87

6E3112

Roll No. _____ Total No of Pages: 4

6E3112

B. Tech. VI Sem. (Main & Back) Exam. May/June 2013

Electrical Engg.

6EE 4Advanced Power Electronics

Time: 3 Hours **Maximum Marks:80**

Min. Passing Marks: 24

Instructions to Candidates:

*Attempt any **five questions,** selecting **one question** from **each unit.** All questions carry **equal** marks. Schematic diagrams must be shown wherever necessary. Any data you feel missing suitably be assumed and stated clearly.*

Units of quantities used/calculated must be stated clearly.

Use of following supporting material is permitted during examination.

1._____ 2._____

UNIT – I

Q.1 (a) What are the steps involved in determining the output voltage waveforms of three-phase bidirectional controllers? [8]

(b) An ac Voltage controller in figure has a resistive load of R=10Ωthe root-mean-square (rms) input voltage is V_s =120V, 60H_Z. The thyristors switch is on for n= 25 cycles and is off for m=75 cycles. Determine (a) the rms output Voltage V_o, (b) the input power factor (PF), and(C) the average and rms current of thyristors. [8]

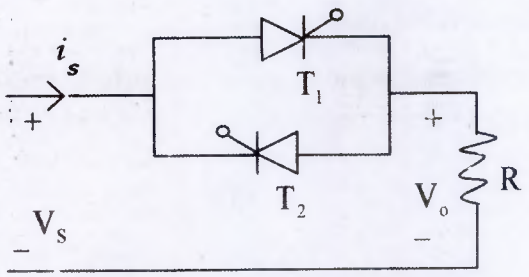

OR

Q.1 (a) What is the Control range of the delay angle for single-phase unidirectional controller? [8]

(b) The load of an ac voltage controller is resistive with R = 1.5Ω. The input voltageis V_s = 120V(rms), 60H_Z. Plot the PF against the delay angle for single-phase half wave and full wave controllers. [8]

UNIT – II

Q.2 (a) With the help of neat circuit diagram & waveforms, explain briefly the operation of transistorized three-phase bridge inverter with resistive load in 120° conduction mode. [10]

(b) Explain why a PWM inverter is superior to a square- wave inverter. [6]

OR

Q.2 (a) State the need for reduction of harmonics in inverters. Outline the various methods for reduction of harmonics or the improvement in waveshape. [8]

(b) Design a self-commutated inverter circuit to operate at a frequency of 3KHz with an optimum distortion. The load Specifications are as follow: R = 5Ω, L=5mH, E_{dc}= 100V. Also compute the output power. [8]

UNIT – III

Q.3 (a) Draw and explain the control circuit block diagram for a cycloconverter with non-circulating current mode. [8]

(b) What is a loadcommutated cycloconverter? How does it differ from line commutated cycloconverter? [8]

OR

Q.3 (a) Describe the control scheme for a cycloconverter using voltage sensing principle of converter group selection. [8]

(b) A three pulse cycloconverter feeds a single phase load of 190V, 45A at a power factor of 0.7 lagging. Determine:

(i) The required supply voltage (ii) Thyristor rating

(iii) Power factor of the supply current. [8]

UNIT – IV

Q.4. (a) Explain the operation of Bi- directional power supplies. [8]

(b) With a neat sketch, explain the operation of flyback converter &derive the equation for its output Voltage. [8]

OR

Q.4. (a) Explain the operation of Resonant- DC power supply.

(b) Write a short note on:

(i) Full bridge converter.

(ii) Switch mode DC power supplies.

UNIT – V

Q.5. (a) Explain Resonant AC power supply.

(b) With a neat sketch, explain multistage conversions. [8]

OR

Q.5. (a) Write a short note on:

(i) Voltage mode control

(ii) Bi-directional AC power supplies. [8]

(b) The load resistance of the ac power supply in figure is R=2.5Ω. The dc input voltage is V_s =100V.The input inverter operates at a frequency of 20KHz with one pulse per half cycle. The on-state voltage drops of transistor switchesand diodes are negligible. The turns ratio of the transformer is a $=N_s/N_p=0.5$. The output inverter operates with a uniform PWM of four pulses per half cycle. The width of each pulse is $\delta=18^\circ$. Determine the rms load current. The ripple voltage on the output of the rectifier is negligible. Neglect the losses in the transformer, and the effect of the load the losses in the transformer, and the effect of the load on the resonant frequency is negligible. [8]

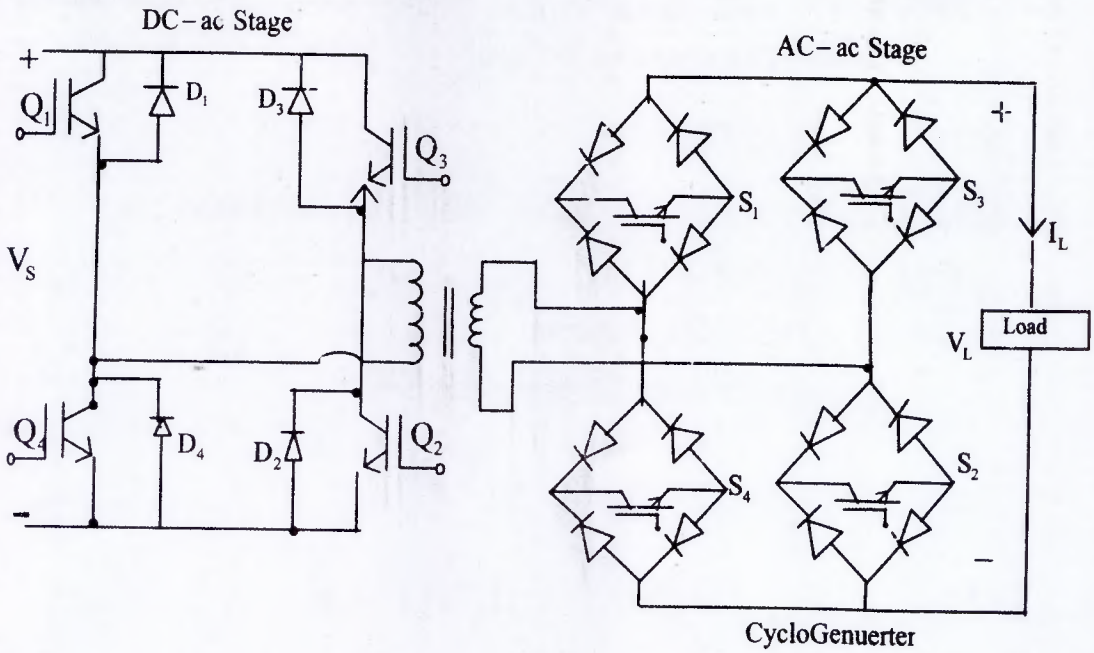

91

6E3113

Roll No. _____ Total No of Pages: 3

6E3113

B.Tech VI Sem. (Main & Back) Exam. May/June 2013

Electrical Engg.

6EE 5 Data Structures In C

Time: 3 Hours **Maximum Marks: 80**

Min. Passing Marks: 24

Instructions to Candidates:

*Attempt any **five questions,** selecting **one question** from **each unit.** All questions carry **equal** marks. Schematic diagrams must be shown wherever necessary. Any data you feel missing suitably be assumed and stated clearly.*

Units of quantities used/calculated must be stated clearly.

Use of following supporting material is permitted during examination.

1._____ 2._____

UNIT – I

Q.1 Write an Algorithm to find largest number in a sorted list. Find its best, average and worst case complexities. [16]

OR

Q.1 (a) What do you understand by Asymptotic notation of an Algorithm. Explain various asymptotic notations. [8]

(b) Discuss Advantages and Disadvantages of Link list over Arrays. Also discuss various types of Link lists. [8]

92

UNIT – II

Q.2 Define two matrix of identical size and write Algorithm for following operations

a) Element by element matrix Addition [4]

b) Transpose of a matrix [6]

c) Matrix Multiplication [6]

OR

Q.2 Derive and Explain formula for calculating the address of any specified member of 2D matrix if matrix is represented in memory as

a) Row major mapping [8]

b) Column major mapping [8]

UNIT – III

Q.3 (a) Discuss any two Applications of stack in detail. [8]

(b) Write and discuss Algorithm for basic operations in stack. [8]

OR

Q3. Write a C Program to implement a priority Queue using link list. [16]

UNIT – IV

Q4. Write and discuss Algorithm for Pre, post and In – order binary tree traversal. [16]

OR

Q.4 Discuss following tree with the help of suitable Example

a) AVL Tree [8]

b) B-Tree [8]

UNIT – V

Q.5 Write short Notes on following: -

a) Graph Representation Methods

b) Minimum Spanning tree [8x2=16]

OR

Q.5 Write short Notes on following: -

a) Heap sort

b) Merge sort

c) Selection sort

d) Insertion sort [4x4=16]

94

6E3115

Roll No. _____ Total No of Pages: 3

6E3115

B.Tech VI Sem. (Main & Back) Exam. May/June 2013
Electrical Engg.
6EE 6.2 Power System Instrumentation

Time: 3 Hours **Maximum Marks: 80**

Min. Passing Marks: 24

Instructions to Candidates:

*Attempt any **five questions,** selecting **one question** from **each unit.** All questions carry **equal** marks. Schematic diagrams must be shown wherever necessary. Any data you feel missing suitably be assumed and stated clearly.*

Units of quantities used/calculated must be stated clearly.

Use of following supporting material is permitted during examination.

1._____ 2._____

UNIT – I

Q1. (a) The following 10 observations were recorded when measuring a Voltage: 31.6, 31.0, 31.7, 31.0, 32.1, 31.9, 31.0, 31.9, 32.5 and 31.8 volt. Find

(i) The probable error of one reading

(ii) The probable error of mean. [8]

(b) Define the following for Gaussian distribution of data:

(i) Precision index

(ii) Probable error

(iii) Standard deviation of mean

(iv) Standard Deviation of standard deviation. [8]

OR

Q1. (a) Define limiting (guarantee) errors. Derive the expression for relative limiting error [8]

(b) Explain the following:

(i) Systematic errors

(ii) Random errors [8]

UNIT – II

Q2. (a) What are different selection criteria for proper transducer? Explain the input, output and transfer characteristics of a transducers. [8]

(b) Derive an expression for the gauge factor of strain gauges. Differentiate the bonded and unbounded type strain gauges. [8]

OR

Q2. (a) Explain the Construction and working of seismic accelerometers. [8]

(b) Explain the various modes of operation of Piezo – electric transducers. Also, give applications of it. [8]

UNIT – III

Q3. (a) Explain the working principle of a function generator with block diagram. [8]

(b) Explain the circuit diagram of Instrumentation amplifiers and discuss the applications, merits, & demerits also. [8]

OR

Q3. (a) Explain the construction and working of frequency to voltage converters with suitable diagrams. [8]

(b) What do you mean by isolation amplifiers? Explain the circuit diagram & applications also. [8]

UNIT – IV

Q4. (a) What is a power factor? Explain the causes of low power factor and methods of improvement of power factor. [8]

(b) Explain the single electrodynamometer type wattmeter method of measurement of reactive power in 3ϕ circuits. [8]

OR

Q4. (a) Explain the construction and working principal of the Ratio meter type frequency meter. [8]

(b) Explain the industrial metering and various types of industrial tariffs. [8]

UNIT – V

Q5. (a) Explain the Wilson compensation method for reduction of errors in current transformers. [8]

(b) Explain the effect of the following on the performance of current transformers:

(i) Change of secondary circuit burden

(ii) Change of frequency [8]

OR

Q5. (a) Explain the various protection criterions for current transformers. [8]

(b) Explain the active and reactive power in the different plants. [8]