233

5E5041

Roll No. _____ Total No of Pages: 4

5E5041

B. Tech. V Sem. (Main / Back) Exam., Dec. 2014
Electrical & Electronics Engineering
5EX1A Power Electronics
(Common for EX, EE)

Time: 3 Hours **Maximum Marks: 80**

Min. Passing Marks: 24

Instructions to Candidates:

*Attempt any **five questions,** selecting **one question** from **each unit.** All questions carry **equal** marks. Schematic diagrams must be shown wherever necessary. Any data you feel missing suitably be assumed and stated clearly.*

Units of quantities used/calculated must be stated clearly.

Use of following supporting material is permitted during examination.

(Mentioned in form No. 205)

1. NIL 2. NIL

UNIT – I

Q. 1 (a) Explain the constructional details and working of power MOSFET. [8]

(b) Explain and draw the switching characteristics of the power IGBT. [8]

OR

(a) Discuss the two transistor model of a thyristor. [8]

(b) Describe the various commutation of thyristor. [8]

UNIT-II

Q. 2 (a) Explain how SCR is protected against high dv/dt. [8]

(b) Explain various turning on methods of a thyristor. [8]

OR

(a) Explain series operation of thyristor. [8]

(b) In a UJT triggering oscillator as shown in figure, R=6.8 kW and C=0.1 $\propto$F. If η= 0.82, calculate the frequency of oscillation of relaxation oscillator. [8]

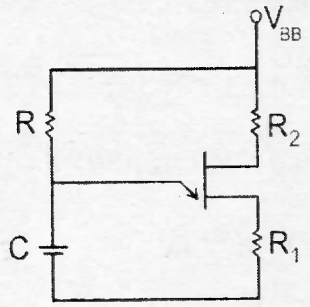

UNIT-III

Q. 3 (a) Describe working of a single phase full converter with RL load through the wave form of supply voltage, load voltage, load current and voltage across thyristor. Also, derive expression for load voltage & input power factor. [10]

(b) A single phase half wave controlled converter is operated from a 120V, 50Hz supply. Load resistance R=10 ohms. If average out put voltage is 25% of the maximum possible average output voltage, determine:- [6]

(i) Firing angle

(ii) RMS & Average output current

OR

(a) Explain principle of operation of single-phase dual converter without circulating current in detail. [8]

(b) A single-phase dual converter is operated from a 200 V, 50 Hz supply and the load resistance is R=20 ohms. The circulating inductance is L_r = 50mH, delay angle are $\propto_1$ = 50° and $\propto_2$ =130°. Calculate the peak circulating current and the peak current of converter1. [8]

UNIT-IV

Q. 4 (a) Explain the extinction angle control technique of power factor improvement along with the circuit diagram and waveform. [8]

(b) Describe the working of a single phase semi-converter with RLE load, through the wave form of supply voltage, load voltage load current and voltage across thyristor and also, derive expression for load voltage and input power factor. [8]

OR

(a) Explain pulse with modulation control technique of power factor improvement along with circuit diagram & wave form. [8]

(b) A single-phase full converter is supplied from 200V, 50Hz Source. If load resistance R=8 ohms and source has an inductance of 1.5 mH, for a firing angle delay of 60°, determine:

(i) Average output voltage

(ii) The angle of overlap. [8]

UNIT-V

Q. 5 (a) Explain working principle of type-C chopper along with relevant circuit diagram & waveform. [8]

(b) Explain the load commutated chopper along with relevant circuit diagram & waveform. [8]

OR

(a) Describe the working of Buck-Boost regulator along with circuit diagram & waveform. [8]

(b) Derive the expressions for steady-state maximum & minimum current for type-A chopper. [8]

237

5E5042

Roll No. _____ Total No of Pages: 3

5E5042

B. Tech. V Sem. (Main / Back) Exam., Dec. 2014
Electrical Engineering
5EE2A Microprocessor & Computer Architecture

Time: 3 Hours **Maximum Marks: 80**

Min. Passing Marks: 24

Instructions to Candidates:

*Attempt any **five questions,** selecting **one question** from **each unit.** All questions carry **equal** marks. Schematic diagrams must be shown wherever necessary. Any data you feel missing suitably be assumed and stated clearly.*

Units of quantities used/calculated must be stated clearly.

Use of following supporting material is permitted during examination.

(Mentioned in form No. 205)

1. NIL 2. NIL

UNIT – I

Q. 1 (a) Explain the various types of buses used in 8085 microprocessor. [8]

(b) Draw the architecture of 8085 microprocessor and explain functions of various registers. [8]

OR

(a) How address lines are multiplexed? Explain in detail with the help of latching circuit diagram. [8]

(b) Explain the control and status signals available in 8085 microprocessor. [8]

UNIT-II

Q. 2 (a) Explain the following instructions of the 8085 microprocessor. [8]

(i) STAX B

(ii) XTHL

(iii) XCHG

(iv) SPHL

(b) Write an assembly language program for finding 2's complement of a given 8 bit number. [8]

OR

(a) Mention various addressing modes in 8085 with suitable example. [8]

(b) Explain the use of rotate instructions, with the help of suitable examples. [8]

UNIT-III

Q. 3 (a) Explain the interfacing of 8257 to 8085 microprocessor. [8]

(b) Draw the block diagram of programmable Interval Timer 8253 and explain its various blocks. [8]

OR

(a) Explain the control word in 8255 PPI. What are different modes of operations possible in 8255? [8]

(b) Draw the block diagram of 8279 and explain the function of each block. Also describe its command word format. [8]

UNIT-IV

Q. 4 (a) Draw internal architecture of 808. Explain the function of various registers. [8]

(b) Draw pin diagram and explain various pins of 8086 microprocessor in minimum and maximum modes. [8]

OR

(a) Draw the block diagram of 8086 microprocessor, and explain the following: [8]

(i) Pipelining concept

(ii) Segmented memory concept

(iii) Extended register concept

(b) Explain various instruction formats application to the 8086 instruction set. Briefly describe addressing modes of 8086. [8]

UNIT-V

Q. 5 (a) Write short note on (any Two): [16]

(i) Virtual Memory

(ii) Different types of micro operations

(iii) Different types of ROM

(iv) Cache memory

240

5E5043

Roll No. _____ Total No of Pages: 4

5E5043

B. Tech. V Sem. (Main / Back) Exam., Dec. 2014
Electrical Engineering
5EE3A Control Systems
Common with EE, EX

Time: 3 Hours **Maximum Marks: 80**

Min. Passing Marks: 24

Instructions to Candidates:

*Attempt any **five questions**, selecting **one question** from **each unit**. All questions carry **equal** marks. Schematic diagrams must be shown wherever necessary. Any data you feel missing suitably be assumed and stated clearly.*

Units of quantities used/calculated must be stated clearly.

Use of following supporting material is permitted during examination.

(Mentioned in form No. 205)

1. Semi – log paper
2. Graph paper; log tables

UNIT – I

Q. 1 Write rules of block diagram algebra for: -

(a) Combining blocks in cascade [3]

(b) Moving a summing point after a block [3]

(c) Moving a summing point ahead of a block [3]

(d) Moving a take off point after a block [3]

(c) Moving a take off point ahead of a block [2]

(f) Eliminating a feedback loop [2]

OR

Find the overall gain using mason's gain formula. [16]

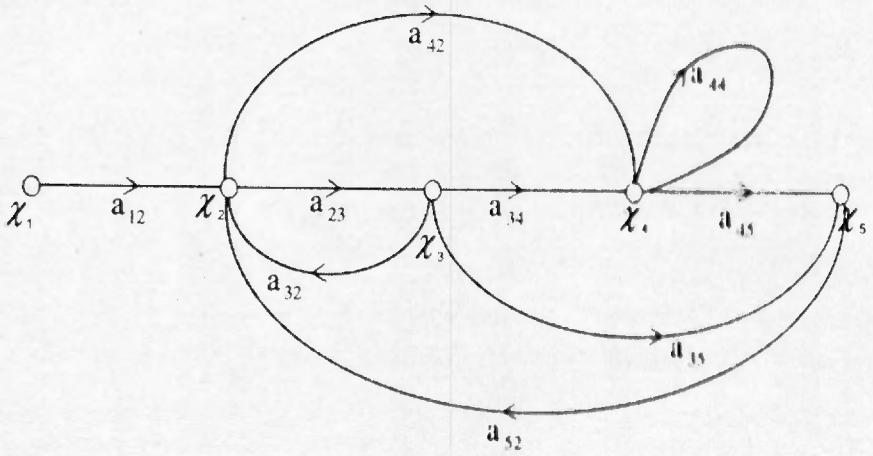

UNIT – II

Q. 2 Define and derive the mathematical expressions for: - [4×4=16]

(a) Rise time of second order system.

(b) Peak time of second order system

(c) Peak overshoot

(d) Settling time

OR

Derive the expressions for steady state error for various inputs (unit – step; unit ramp; unit parabolic) and systems (Type – 0; Type – 1; Type – 2) [16]

UNIT – III

Q. 3 (a) A feedback control system has an open – loop transfer function [16]

$$G(S)H(S) = \frac{K}{S(S+3)(S^2+2S+2)}$$

Find the root locus as K is varied from 0 to ∞.

OR

(b) Consider a sixth order system with the characteristic equation [16]

$$S^6 + 2S^5 + 8S^4 + 12S^3 + 20S^2 + 16S + 16 = 0$$

Find whether system under consideration is stable or not.

UNIT – IV

Q. 4 Draw the bode plot for the transfer function. [16]

$$G(S) = \frac{64(S+2)}{S(S+0.5)(S^2+3.2S+64)}$$

OR

Consider a feedback system whose open loop transfer function is [16]

$$G(S)H(S) = \frac{K}{S(Ts+1)}$$

Determine whether the system is stable or not using Nyquist plot.

UNIT – V

Q. 5 (a) Differentiate between lead, lag and lead – lag networks. [8]

(b) Write short note on proportional, derivative and integral controllers. [8]

OR

(a) Derive the transfer function of lag lead compensator in frequency domain. [8]

(b) Derive expression for lead compensation in time domain. [8]

----------x----------x----------

244

5E5044

Roll No. _____ Total No of Pages: 4

5E5044

B. Tech. V Sem. (Main) Exam., Dec. 2014
Electrical Engineering
5EE4A Database Management System
(Common with EE, EX)

Time: 3 Hours **Maximum Marks: 80**

Min. Passing Marks: 24

Instructions to Candidates:

*Attempt any **five questions**, selecting **one question** from **each unit**. All questions carry **equal** marks. Schematic diagrams must be shown wherever necessary. Any data you feel missing suitably be assumed and stated clearly.*

Units of quantities used/calculated must be stated clearly.

Use of following supporting material is permitted during examination.

(Mentioned in form No. 205)

1. NIL 2. NIL

UNIT – I

Q. 1 (a) Define database and DBMS. How database approach is better than the traditional file approach? Explain [8]

(b) Design an ERD for Airlines Reservation System consisting of flights, aircrafts, airports, fares, reservation, tickets, pilots, crew and passengers. Clearly highlight the primary keys and mapping cardinalities. [8]

OR

(a) Explain the components of DBMS. Also draw a neat diagram of the DBMS architecture. [8]

(b) Differentiate between the following- [4×2=8]

(i) Ternary Relationship and Aggregation

(ii) Specialization and Generalization

(iii) Super, Candidate and Primary keys

(iv) Entity Sets, Attributes and Relationship Sets

UNIT – II

Q. 2 (a) What is normalization? Explain its need. Define various normal forms with example. [8]

(b) Consider the following relations schemas - [4×2=8]

Shop (Shop-No, Sh-name, Sh- address)

Shop owner (Name, adders)

Owns- shop (Name, Shop no)

Customer (C- Name, C- address)

requires (C-Name, item)

has- stock (shop no, item)

supplies (Shop-no, C-Name, Item, price)

Write down the following queries in relational algebra-

(i) Find the names of shop owners who supply some items to address 134, Mahatma Gandhi Road.

(ii) Find the names of customers who have been supplied items of maximum total value.

(iii) Find the names of customers who require the items which have not been supplied. List both the customers and the items.

(iv) Find the names of customers who are supplied all their required items from a particular shop.

OR

(a) Give formal definitions of TRC and DRC. What is meant by safety of expressions? [8]

(b) Consider the following relation schema- [4×2=8]

Employee (person-name, street, city)

Works (person-name, Company-name, salary)

Company (company-name, city)

Manager (person-name, manager-name)

Write the following queries in Relational Algebra-

(i) Find the names of all employees who work for "First Bank"

(ii) Find the names of all employees who live in the same city as the company for which they work.

(iii) Find the names of all employees who live in the same city and on the same city as do their managers.

(iv) Find the names of all employees who don't work for "Small Bank"

UNIT – III

Q. 3 (a) Explain Embedded SQL and its need. How is it different from Dynamic SQL? [8]

(b) Define a trigger. What are the uses of creating triggers? Explain with examples.[8]

OR

(a) Explain the following clauses of SQL- [4×2=8]

(i) ORDER BY

(ii) GROUP BY

(iii) HAVING

(iv) EXCEPT

(b) What is a view? How can a view be used to implement database security? Explain with examples. [8]

UNIT – IV

Q. 4 (a) What is Hashing? Explain its implementation by explaining one Hashing Technique. [8]

(b) What are various types of Indexes? Explain with examples. [8]

OR

(a) Explain a B^+ Tree node structure. Create a B^+ Tree of order 3 having the following key values- 105, 210, 350, 781, 50, 79, 73, 97, 500, 61, 100, 102, 49, 48 [8]

(b) Explain the node structure of B Tree. What are the differences between B and B^+ Tree indexes? Explain. [8]

UNIT – V

Q. 5 (a) Define a Transaction. What are the properties of a Transaction? Explain various Transaction States with a neat diagram. [8]

(b) What is a Deadlock? Explain various techniques of handling deadlocks. [8]

OR

(a) Define serializability. What are its various types? Explain. [8]

(b) What all types of failures can occur in database systems? Explain various log based recovery techniques in detail. [8]

------x------x-----

248

5E5045

Roll No. _____ Total No of Pages: 4

5E5045

B. Tech. V Sem. (Main / Back) Exam., Dec. 2014
Electrical Engineering
5EE5A Transmission & Distribution of Electrical Power
(Common with EE, EX)

Time: 3 Hours **Maximum Marks: 80**

Min. Passing Marks: 24

Instructions to Candidates:

*Attempt any **five questions**, selecting **one question** from **each unit**. All questions carry **equal** marks. Schematic diagrams must be shown wherever necessary. Any data you feel missing suitably be assumed and stated clearly.*

Units of quantities used/calculated must be stated clearly.

Use of following supporting material is permitted during examination.

1. NIL 2. NIL

UNIT – I

Q. 1 (a) Explain the radial and ring main distribution system. [8]

(b) A 3 phase ring distributor ABCD fed at A 11kV supplies balanced loads of 40A at 0.8pf lagging at B 50A, .707pf lagging at C and 30 A at 0.8pf lagging at D, the total load currents being referred to the supply voltage at A. The impedances per phase of the various sections are Section AB = (1 =j2) Ω, section BC = (2 + j3) Ω, section CD = (1 + j1) Ω, section DA = (3 + j4) Ω. Calculate the currents in various sections and station bus bar voltages at B, C and D. [8]

OR

(a) Draw and explain the structure of electrical power system indicating the voltage level in each transmission levels. [8]

(b) A two wire distribution system AB 6000m long is fed at both ends at 220V. Loads of 20A, 40A, 50A and 30A are tapped at distances of 100m, 250m, 400m and 500m from the end A respectively. If the area of cross – section of distributor conductor is $1cm^2$, find the minimum consumer voltage. Take $\rho = 1.78 \times 10$-8Ωm. [8]

UNIT – II

Q. 2 (a) An overhead line has a span of 160m of stranded copper conductor between level supports. The sag is 3.96 meter at – 5.50 C with 9.53 mm thick in ice coating and wind pressure of 40 $Kgfm^2$ of projected area. Calculate the temperature at which the sag will remain the same under conditions of no ice and no wind. The particulars of the conductor are as follows: [10]

Size of conductor 7/3.45 mm, Area of cross section 64.5 mm2 weight of conductor 0.594 Kgf/m, Modulus of elasticity 12700 Kgf/mm2, Coefficient of linear expression 1.7 × 10 – 510 C, Assume 1 ms of ice to weight 913.5Kgf.

(b) Derive an expression for sag of a line supported between two supports of same height. [6]

OR

(a) What is meant by the disruptive critical voltage and visual critical voltage? State the effects of conductor size, spacing and condition of the surface of conductors on these voltages. [8]

(b) Calculate the capacitance per phase of a three – phase double circuit line as shown in below Figure. The diameter of the conductor is 2.2cm. Assume that the line is completely transposed. [8]

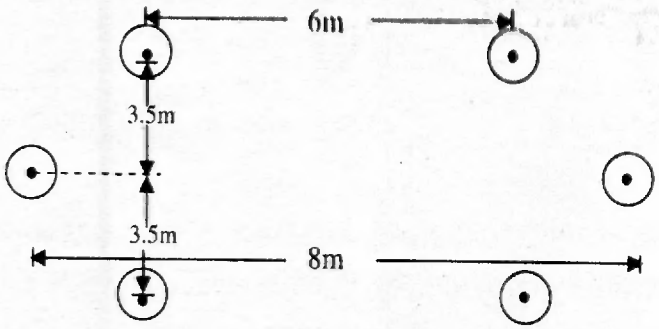

UNIT – III

Q. 3 (a) Explain about skin and proximity effects. [6]

(b) Deduce an expression for capacitance of three phase transmission line with unsymmetrical spacing (Transposed conductors) [10]

OR

(a) Starting from first principles derive an expression for the sending end voltage and current of a long transmission line in terms of the line parameters and receiving end voltage and current. [10]

(b) Derive the capacitance of a three – phase overhead line. [6]

UNIT – IV

Q. 4 (a) A 50Hz, three phase transmission line is 250km long. It has a total series impedance of (20 + j60) ohms and a shunt admittance of 914 × 10 – 6 mhos. It delivers 50MW, 220 kV with 0.85 power factor lagging. Find the [8]

(i) Sending end voltage,

(ii) Voltage regulation and

(iii) Transmission efficiency by nominal – T method

(b) Explain the various factors affecting the corona loss. [8]

OR

(a) Derive the expression for the voltage induced in communication lines due to the current in power lines. [8]

(b) Estimate the corona loss for a three – phase, 110Kv, 50Hz, 150Km – long transmission line consisting of three conductors each of 10mm diameter and spaced 2.5m apart in a equilateral triangle formation. The temperature of air is 30°C and the atmospheric pressure is 750mm of mercury. Assume the irregularity factor as 0.85. Ionization of air may be assumed to take place at a maximum voltage gradient of 30Kv/cm. [8]

UNIT – V

Q. 5 (a) Draw with neat sketches and explanation of pin and suspension type insulators. Compare their merits and dements. [8]

(b) Explain any two methods of grading of cables with necessary diagrams. [8]

OR

(a) A 3 phase overhead transmission line is being supported by three disc insulators. The potentials across top unit and middle unit are 9kV and 11kV respectively. Calculate: [8]

(i) The ration of capacitance between pin and earth to the self – capacitance of each unit.

(ii) The line voltage

(iii) String Efficiency

(b) With neat diagrams explain constructional features of various types of cables. [8]

252

5E5047

Roll No. _____ Total No of Pages: 4

5E5047

B. Tech. V Sem. (Main / Back) Exam., Dec. 2014
Electrical Engineering
5EE6.2A Principles of Communication Systems
Common with EE, EX

Time: 3 Hours **Maximum Marks: 80**

Min. Passing Marks: 24

Instructions to Candidates:

*Attempt any **five questions**, selecting **one question** from **each unit**. All questions carry **equal** marks. Schematic diagrams must be shown wherever necessary. Any data you feel missing suitably be assumed and stated clearly.*

Units of quantities used/calculated must be stated clearly.

Use of following supporting material is permitted during examination.

(Mentioned in form No. 205)

1. NIL 2. NIL

UNIT – I

Q. 1 (a) Find the expressions for overall noise figure and overall noise temperature of a cascaded amplifier. [10]

(b) Evaluate the overall noise – figure of the receiver and the overall equivalent temperature of the receiver of typical microwave receiver shown in the figure given below. [6]

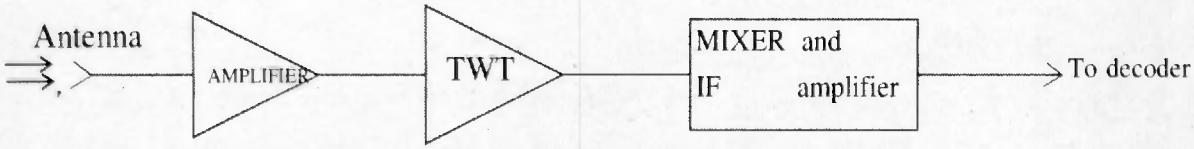

Gain Ga_1 = 30dB Ga_2 = 20dB Ga_3 = 40dB

Noise Temp = 5°K Noise Figure = 6dB Noise Figure = 12dB

Assume the ambient temperature is 17°C.

OR

(a) Explain the terms: noise bandwidth, noise temperature, available power, signal to noise ratio and noise figure [10]

(b) A receiver with 80 dB gain and an effective noise temperature of 3000 K is connected to an antenna that has a noise temperature of 600 K. Find the receiver noise power output over a 40 MHz band. Given Boltzmann's constant = 1.38×10^{-23} [6]

UNIT – II

Q. 2 (a) Draw the block diagram of super – heterodyne receiver and give its merit over TRF. Why is it called super – heterodyne? Why is local oscillator frequency kept higher? [10]

(b) Calculate the percent power saving of an SSB signal if the AM wave is modulated to a depth of [6]

(a) 100%

(b) 50%

OR

(a) What is modulation index in AM? What is over modulation? How can you detect an over modulated signal? How can you measure modulation index using a CRO? [10]

(b) Show that an AM signal can be recovered irrespective of the value of percentage modulation by using synchronous detection technique. [6]

UNIT – III

Q. 3 (a) Draw and explain the circuit diagram of Ratio detector. What are its merits and demerits? [10]

(b) A carrier $E_c \cos W_c t$ is modulated by a signal - [6]

$$f(t) = 2 \cos 2\pi t + 6 \cos 10^3\, 2\pi t + 7 \cos 10^3\, 4\pi t$$

Find the bandwidth of FM using Carson's rule. Assume deviation sensitivity is 10×10^3 Hz per Volt. Also find the 'deviation ratio'.

OR

(a) Why is direct modulation not preferred for FM generation? How do you generate FM from PM? [10]

(b) Show that the bandwidth of FM signal remains the same even if the modulating signal frequency varies by a factor 1:100. Assume frequency deviation is 75 KHz. [6]

UNIT – IV

Q. 4 Define the figure of merit and explain its significance. Derive an expression for the DSB –SC receiver. [16]

OR

Calculate figure of merit for single tone modulation in FM receiver. Take suitable assumptions if required. [16]

UNIT – V

Q. 5 (a) Why is flat – top sampling preferred over natural sampling? [4]

(b) Write short note on any two of the following - [6x2=12]

(i) PAM

(ii) PPM

(iii) PWM

OR

(a) With the help of neat circuit diagram explain the generation and detection of PPM signal. [12]

(b) Compare PAM, PWM and PPM system. [4]

----------x-------x----------

2 56

5E3126

Roll No. _____ Total No of Pages: 4

5E3126

B. Tech. V Sem. (Back) Exam., Dec. 2014
Electrical Engineering
5EE4(O) Generation of Electrical Power

Time: 3 Hours **Maximum Marks: 80**

Min. Passing Marks: 24

Instructions to Candidates:

*Attempt any **five questions,** selecting **one question** from **each unit.** All questions carry **equal** marks. Schematic diagrams must be shown wherever necessary. Any data you feel missing suitably be assumed and stated clearly.*

Units of quantities used/calculated must be stated clearly.

Use of following supporting material is permitted during examination.

(Mentioned in form No. 205)

1. NIL 2. NIL

UNIT – I

Q. 1 (a) Discuss the advantages and disadvantages of using pulverized coal in steam plants. [8]

(b) What do you understand by hydrograph and mass curve? What information does they provide? What are its uses? [8]

OR

Q. 1 (a) Distinguish between forced draft, induced and balanced draft. [8]

(b) Why is a moderator necessary in a reactor? What materials are suitable as moderator materials in a reactor? [8]

UNIT – II

Q. 2 (a) Discuss the role of new energy sources in the context of present day energy crisis. [8]

(b) What prohibits large scale utilization of wind power for electricity generation? [8]

OR

Q. 2 (a) What are the special problems in construction of barrages for tidal scheme? [8]

(b) Briefly explain green house effect. [8]

UNIT – III

Q. 3 The load on a power plant on a typical day is as under: [16]

Time	12 – 5 am	5 – 9 am	9 – 6 am	6 pm – 10 pm	10 pm – 12 am
Load (MW)	20	40	80	100	20

Plot the chronological load curve, load duration curve, energy load curve and mass curve. Find the load factor of the plant and energy supplied by the plant in 24 hours.

OR

Q. 3 The load curve of an electrical system in linear with the following values at different times of the day: [16]

Time	12	5am	9	6	8pm	10	12
Load (MW)	50	50	100	100	150	80	50

Plot chronological curve, load duration curve, mass curve. Find energy required by the system in a day and the system daily load factor.

UNIT – IV

Q. 4 (a) Differentiate between fixed and operating costs of power plants. Lists the item which constitute the fixed and the operating costs. [8]

(b) Discuss the role of load factor on the cost of electrical energy. [8]

OR

Q. 4 (a) What is depreciation reserve? Why is it necessary to maintain it? Discuss the methods to calculate the depreciation charges. [8]

(b) Why should the total generation cost per unit of thermal energy depend on the station load factor? Draw a typical curve showing this variation and justify its shape. [8]

UNIT – V

Q. 5 (a) The monthly electricity consumption of a residence can by approximated as under: [8]

Light Load	:	5 tube lights 40 watt each working for 3 hrs. daily
Fan Load	:	3 fans 100 watt each working for 5 hrs. daily
Refrigerator Load	:	1 kwh daily
Misc. Load	:	1 kw for one hr. daily

Find the monthly bill at the following tariff:

First 15 units	:	Rs. 2.74 per kwh
Next 25 units	:	Rs. 2.70 per kwh
Remaining units	:	Rs. 2.36 per kwh
Constant charge	:	Rs. 7.00 per month

Discount for prompt payment 5%

(b) How does the plant location affect the reliability of electric supply? [8]

OR

Q. 5 (a) What consideration governs the selection of plant size? [8]

(b) Discuss the different types of tariffs used for charging the consumers of electric energy. [8]

----------x----------x----------