3E1641

Roll No. _____ Total No of Pages: 4

# 3E1641

## B. Tech. III Sem. (Main/ Back) Exam., Feb. 2015
## Electrical & Electronics Engineering
## 3EX1A Electronic Devices & Circuits
## Common for EC, EIC, EE, EX, AI, BM

Back: 24

*Instructions to Candidates:*

*Attempt any **five questions,** selecting **one question** from **each unit.** All questions carry **equal** marks. Schematic diagrams must be shown wherever necessary. Any data you feel missing suitably be assumed and stated clearly.*

*Units of quantities used/calculated must be stated clearly.*

*Use of following supporting material is permitted during examination.*

*(Mentioned in form No. 205)*

1. NIL _____ 2.NIL _____

## UNIT-I

Q. 1 (a) In a P-type semiconductor, $p = 10^{16}/cm^3$ & $\mu_p = 400\ cm^2$ V-s. If a magnetic field (B) of $5\times10^{-4}$ wb/cm$^2$ is applied in the + x direction & an electric field of 2000 v/cm is applied in the + y direction, determine the value of the electric field in the + z the + z direction due to the Hall effect. [8]

(b) Explain mobility and conductivity. [8]

**OR**

Q. 1 (a) Explain diffusion and continuity equation [8]

(b) Find the concentration of holes and of electrons in p-type germanium at 300° K if the conductivity is 100 $(\Omega - cm)^{-1}$. [8]

## UNIT-II

Q. 2 (a) Explain the physical mechanism of avalanche and zener breakdown. Also explain the effect of temperature on breakdown voltage in both the cases. [8]

(b) $I_o = 1\mu A$ for P-N junction (Si type) at 300° K. Calculate the dynamic & static resistance at 200 mV forward bias at 300° K. Here $\eta_{si} = 2$. [8]

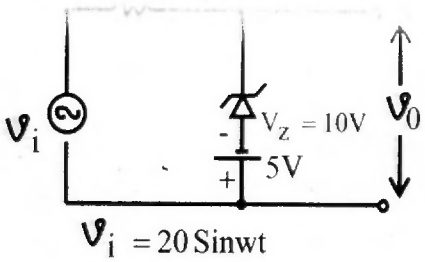


Fig – (A)

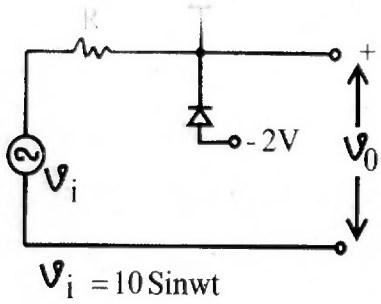


Fig – (B)

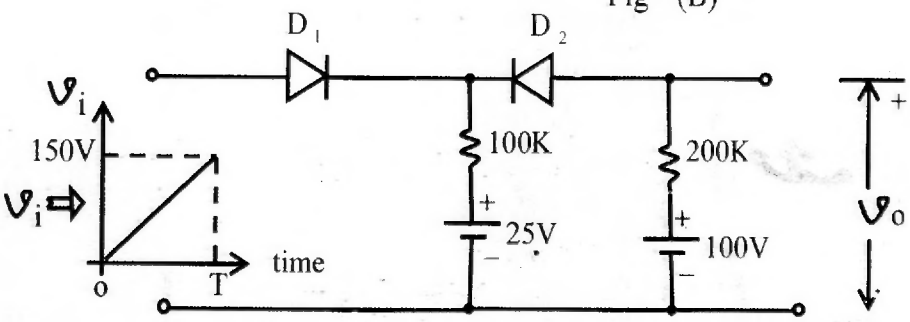


Fig - (C)

## UNIT-III

Q. 3 (a) Explain Ebers-Moll model. [8]

(b) Find the region of operation & the node currents & voltages of the circuits. Here neglect $I_{co}$. [8]

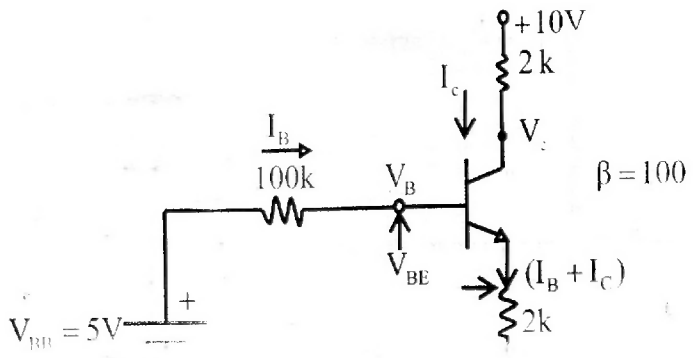


Q. 3 (a) Explain thermal runaway. [6]

(b) h- parameters of a BJT used in CE amplifier are -

$h_{ie} = 1k\Omega$, $h_{fe} = 100$, $h_{re} = 2\times10^{-4}$ & $h_{oe} = 20\ \mu A/V$.

If $R_C = 5K\Omega$ & $R_S = 1K\Omega$, determine $A_I$, $R_L$, $A_V$, $A_{IS}$, $A_{VS}$, $R_O$ & $R'_o$ [10]

## UNIT-IV

Q. 4 (a) Explain construction & operation of E-MOSFET. Also draw the required characteristics. [10]

Q. 4 (b) Find voltage gain of a given CS amplifier. Here $g_m = 2$ mA/V, $r_d = 10$ kΩ. [6]

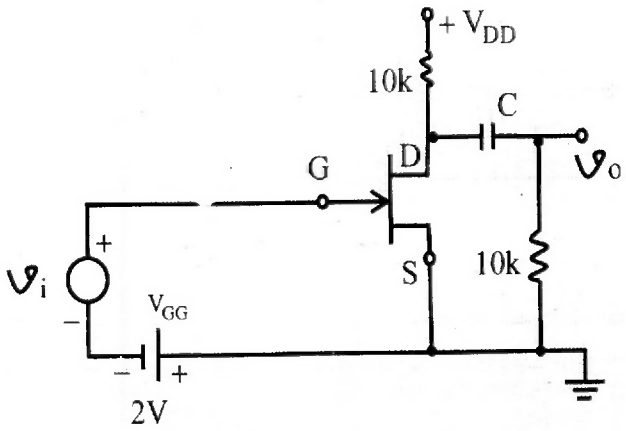

**OR**

Q. 4 (a) Draw the circuit diagram and explain the biasing methods for E-MOSFET. [8]

(b) For given CS amplifier. $V_{GSQ} = -2.6V$ & $I_{DQ} = 2.6$ mA, with $I_{DSS} = 8mA$, $V_P = -6V$ & $r_d = 50\ K\Omega$.

Find $g_m$, M, $R_i$ $R_o$ & $A_V$.

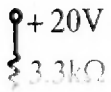


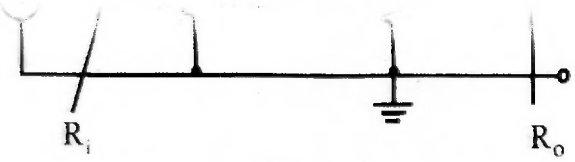


[8]

## UNIT-V

Q. 5 (a) Calculate the voltage gain, input impedance and output impedance for given cascaded FET amplifier. Assume identical JFETS with $g_m = 2.5$ ms & $r_d = ¥\ \Omega$.[8]

(b) If an $\upsilon_i = 10mV$, find the value of output voltage across the load resistance of $10K\Omega$ connected at the output. [8]

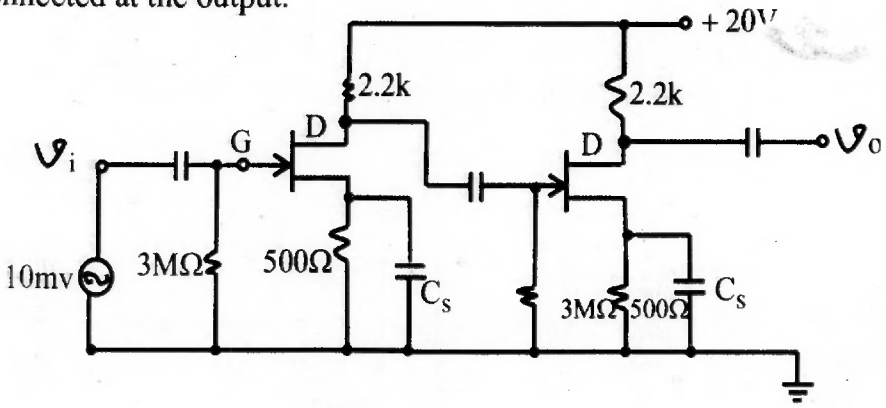


**OR**

Q. 5 (a) Draw and analyse the differential amplifier using BJT. [8]

(b) Draw and explain darlington pair. [8]

--------x--------x-------

Roll No. _____ Total No of Pages: 7

3E1642

# 3E1642

## B. Tech. III Sem. (Main / Back) Exam., Feb. 2015
## Electrical Engineering
## 3EE2A Circuit Analysis - I

Back: 24

*Instructions to Candidates:*

*Attempt any **five questions,** selecting **one question** from **each unit.** All questions carry **equal** marks. Schematic diagrams must be shown wherever necessary. Any data you feel missing suitably be assumed and stated clearly.*

*Units of quantities used/calculated must be stated clearly.*

*Use of following supporting material is permitted during examination.*

*(Mentioned in form No.205)*

1. NIL 2. NIL

## UNIT – I

Q. 1 (a) Prove that the resonance frequency of a given circuit is given by [8]

$$\omega_0 = \frac{1}{L_2}\sqrt{\frac{L_2}{C} - R_2^2}$$

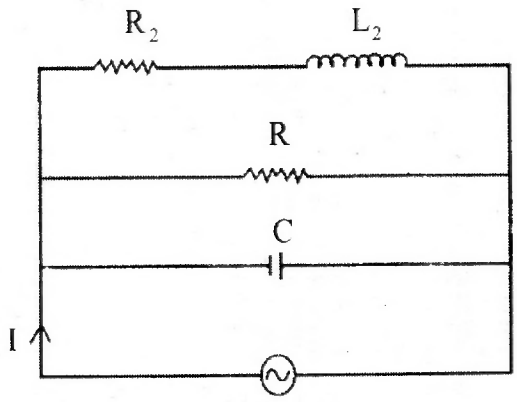


Fig.1(a)

(b) In the parallel circuit shown in Fig. 1(b), find - [4 × 2 = 8]

(i) Total admittance

(ii) Line current

(iii) Power factor of the circuit

(iv) Power consumed

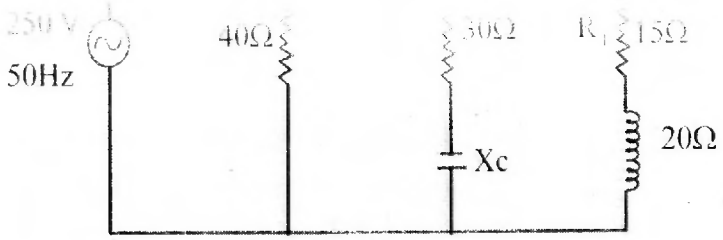


Fig. 1 (b)

**OR**

Q. 1 (a) Explain the principle of duality and make the conversion table for electrical circuits. Draw the dual of the network in Fig. 1(a') shown below- [6 × 2 =12]

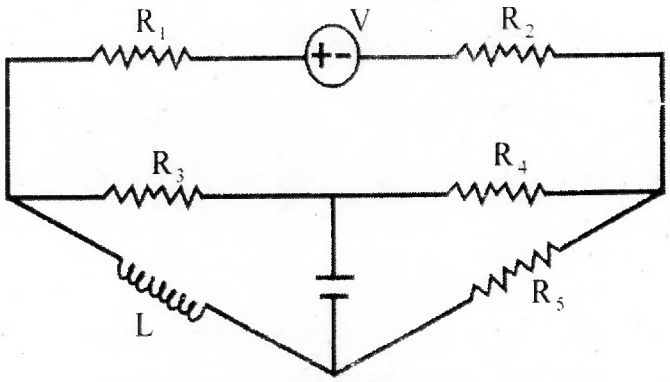


Fig. 1(a')

(b) Define the terms: [4 × 1 = 4]

(i) Twig

(ii) Tie set

(iii) Cut set

(iv) Incidence matrix.

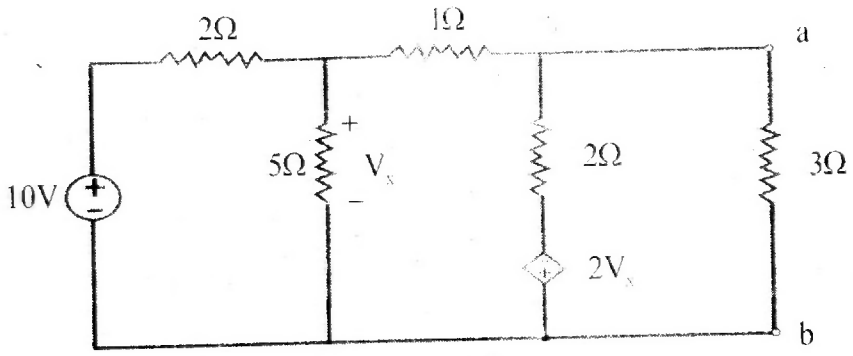


Fig. 2 (a)

(b) Using superposition theorem, find the current in the 10Ω resistor. [6]

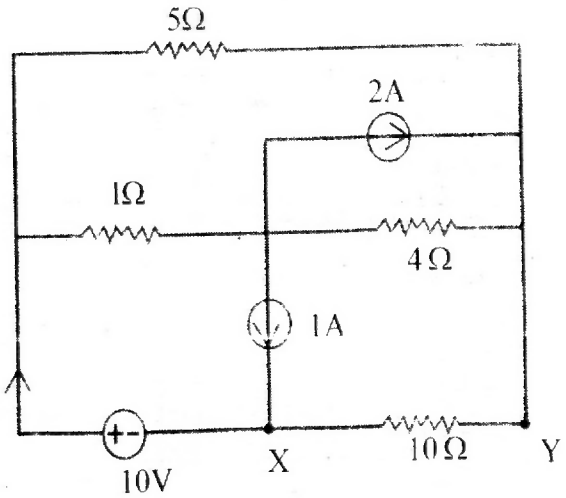


Fig. 2 (b)

**OR**

Q. 2 (a) In the circuit shown in fig. 2(a$^1$), find the value of R such that maximum power transfer takes place. What is the amount of this maximum power? [8]

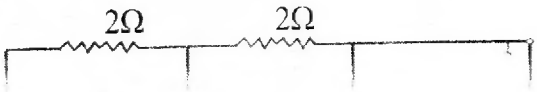


(b) Explain the compensation theorem with its limitations. [8]

## UNIT – III

Q. 3 (a) Explain with neat circuit and phasor diagrams, how the power and power factor of 3-ϕ system can be measured by means of two wattmeter method. [8]

(b) What are the advantages of 3-ϕ system? Draw vector diagram for phase and line voltages and currents in star and delta connections. [8]

**OR**

Q. 3 (a) Describe the voltamp reactive power in 3-ϕ system and power relations in A. C. circuits. [8]

(b) Write down the relationship between line voltage and line current with phase voltage and phase current in star connected and delta connected circuits. [8]

# UNIT – IV

Q. 4 (a) Find the trigonometric fourier series for the triangular wave shown in Fig. 4(a). [8]

Fig. 4 (a)

(b) Derive the expression of power with non-sinusoidal voltage and current. [8]

**OR**

Q. 4 A voltage wave $v = 150 \sin \omega t + 50 \sin (3\omega t + 33°) - 20\sin (5\omega t - 30°)$ is applied to the circuit shown below. Find: [16]

(a) expression for current wave

(b) rms value of current, and

(c) total power consumed in the circuit.

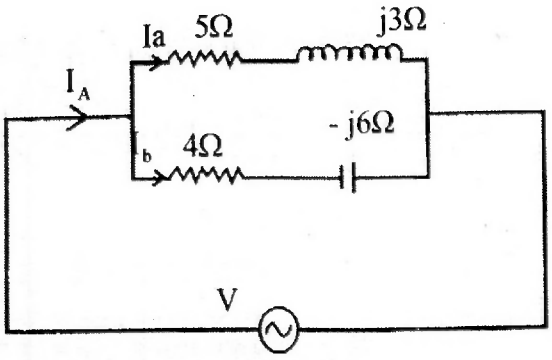


Fig. 4.

# UNIT – V

Q. 5 (a) Find $V_c$ (t) and $I_L$ (t) in the circuit of Fig. 5(a) assuming zero initial conditions. [8]

Fig. 5 (a)

(b) Find the Laplace transform of the wave form shown in Fig. 5(b) [8]

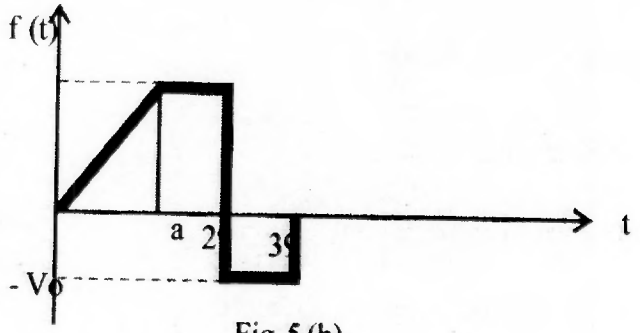


Fig. 5 (b)

**OR**

Q. 5 (a) Determine i(t) of the circuit in circuit Fig. 5(a[1]) for the pulse input voltage as shown in Fig. 5(a[1]) with zero initial conditions. Take R = 1Ω and C = 1F [8]

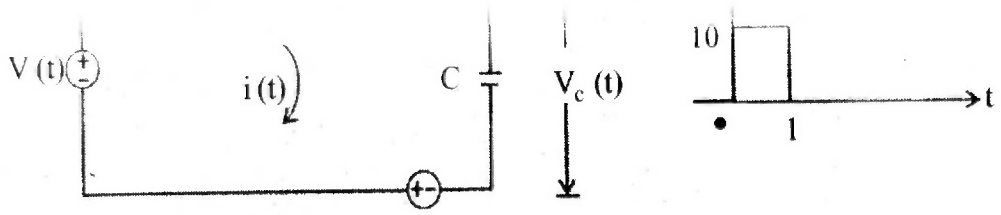


(b) State and deduce initial – value and find value theorems. [8]

---

3E1645

Roll No. _____ Total No of Pages: 4

# 3E1645

## B. Tech. III Sem. (Main / Back) Exam., Feb. 2015
## Electrical & Electronic Engineering
## 3EX5A Electrical Machines - I
## EE, EX

Back: 24

*Instructions to Candidates:*

*Attempt any **five questions,** selecting **one question** from **each unit.** All questions carry **equal** marks. Schematic diagrams must be shown wherever necessary. Any data you feel missing suitably be assumed and stated clearly.*

*Units of quantities used/calculated must be stated clearly.*

*Use of following supporting material is permitted during examination.*

*(Mentioned in form No.205)*

1. NIL _____ 2. NIL _____

## UNIT – I

Q. 1 (a) Explain the phenomenon of energy balance. Derive an expression for energy stored in magnetic circuit. [8]

(b) Discuss permanent magnets and their applications. [8]

**OR**

Q. 1 (a) With help of a suitable diagram explain hysteresis and eddy-current losses as applied to magnetic material. [8]

(b) The flux in a magnetic core is alternating sinusoidally at a frequency of 600Hz. The maximum flux density is 2T and the eddy-current loss is 15W. Find the eddy-current loss in the core if frequency is raised to 800Hz and the maximum flux density is reduced to 1.5 T. [8]

## UNIT – II

**OR**

Q. 2 (a) Explain the meaning and significance of the critical field resistance of a shunt generator. [4]

(b) State the condition which determines if a DC machine is in generating or motoring mode. [4]

(c) Draw the power flow diagram of a DC generator. Also discuss the condition for maximum efficiency. [8]

## UNIT – III

Q. 3 (a) Sketch the speed-torque characteristic method of speed control of a DC series motor. [8]

(b) Enumerate and classify the losses in a DC shunt motor. [8]

**OR**

Q. 3 (a) Explain different methods of braking of DC motors. [8]

(b) A DC Shunt motor has speed control range of 1600 rpm to 400 rpm by rheostatic control. All losses and armature reaction effect may be neglected.

(i) The motor drives a constant power load. It has a speed of 1600 rpm drawing 120A armature current. What would be the armature current at 400 rpm?

(ii) Repeat part

## UNIT – IV

Q. 4 (a) Justify that under SC test the core losses are negligible. [4]

(b) Discuss back – to – back (Sumpner's test ) test on single – phase transformers. [4]

(c) A transformer has its maximum efficiency of 0.98 at 15 kVA at upf. Compare its all – day efficiencies for the following load cycles: [8]

(i) Full load of 20kVA 12 hours/day and no-load rest of the day.

(ii) Full load 4 hours/day and 0.4 full load rest of the day.

Assume the load to operate on upf all day.

**OR**

Q. 4 (a) Draw and explain the idea of a welding transformer. [8]

(b) A 500 kVA transformer has an efficiency of 98% at full load and also at 65% full load: both at 0.7 Pf lagging.

(i) Separate out the losses of transformer

(ii) Determine the efficiency of transformer at $\frac{3}{4}^{th}$ full load. [8]

# UNIT – V

Q. 5 (a) Discuss following with respect to three – phase transformers: [8]

(i) Open delta connection

(ii) Scott connection

(b) Explain parallel operations of three – phase transformers. Also list the conditions [8]

Q. 5 Write notes on any two of the following: [8+8=16]

(a) Excitation phenomenon of transformers

(b) Switching currents in transformers

(c) Magnetizing inrush current in transformers.

--------x-------x-------

3E1646

Roll No. _____ _____

Total No of Pages: 4

# 3E1646

## B. Tech. III Sem. (Main / Back) Exam., Feb. 2015
## Electrical & Electronics Engineering
## 3EX6A Advanced Engineering Mathematics - I
## EE, EX

Back: 24

*Instructions to Candidates:*

*Attempt any **five questions,** selecting **one question** from **each unit.** All questions carry **equal** marks. Schematic diagrams must be shown wherever necessary. Any data you feel missing suitably be assumed and stated clearly.*

*Units of quantities used/calculated must be stated clearly.*

1. NIL _____ 2.NIL _____

## UNIT – I

Q. 1 (a) Prove that $L\left\{\frac{\sin^2 t}{t}\right\} = \frac{1}{4}\log\left(\frac{s^2+4}{s^2}\right)$ [4+4=8]

and hence deduce the integral $\int_0^\infty \frac{\sin^2 t}{t^2}\,dt$

(b) Find the inverse Laplace transform of $\log\sqrt{1+\frac{9}{s^2}}$ [8]

**OR**

Q. 1 (a) Solve the following differential equation

$$(D^2 + 9)\, y = \cos 2t \quad \text{with } y(0) = 1,\ y\left(\frac{\pi}{2}\right) = -1$$ [8]

(b) Solve $\frac{\partial^2 u}{\partial t^2} - \frac{\partial^2 u}{\partial x^2} = xt$ with boundary conditions $u(0) = 0,\ \left(\frac{\partial u}{\partial t}\right)_{t=0} = 0$ [8]

Q. 2 (a) Find the Fourier Transform of $f(x) = \begin{cases} 1 - x^2, & |x| < 1 \\ 0, & |x| > 1 \end{cases}$ [4+4=8]

Also evaluate $\int_0^\infty \frac{x \cos x - \sin x}{x^3} \cos\frac{x}{2}\, dx$

(b) Solve the following partial differential equation

$$\frac{\partial u}{\partial t} = \frac{c^2 \partial^2 u}{\partial x^2}, \quad t > 0,\ -\infty < x < \infty$$ [8]

Satisfying $u(x, 0) = f(x)$

**OR**

Q. 2 (a) Find the Fourier sine and cosine transforms of [4+4=8]

$$f(x) = \begin{cases} x & 0 < x \le 1 \\ 2 - x & 1 < x < 2 \\ 0 & x \ge 2 \end{cases}$$

(b) Find the inverse DFT of the sequence

$$\{G_j\} = \left\{0,\ \frac{3 + i\sqrt{3}}{2},\ \frac{3 - i\sqrt{3}}{2}\right\}$$ [8]

## UNIT – III

Q. 3 (a) Find the Fourier series for $(x) = x+x^2$, $-\pi < x < \pi$ [8]

(b) The turning moment T units of the crank shaft of a steam engine is given for a series of the values of the crank angle θ in degrees:

$\theta = 75^\circ$

**OR**

Q. 3 (a) Find a function y (x) for which $\int_0^1 \left[x^2 + (y')^2\right] dx$

is stationary, given that $\int_0^1 y^2\, dx = 2$, $y(0) = 0 = y(1)$. [8]

(b) Show that the arc length between two points in a plane is stationary when the curve joining them is a straight line. [8]

## UNIT – IV

Q. 4 (a) Show that the function $f(z) = e^{-z^{-4}}$, $z \neq 0$, $f(0) = 0$ is not analytic at $z = 0$, although C – R equations are satisfied at that point. [8]

(b) Find the bilinear transformation which maps the points $z = 1, i, -1$ respectively onto the points $w = i, 0, -i$. For this transformation, find the image of concentric circles $|z| = r$, $(r > 1)$ [4+4=8]

**OR**

Q. 4 (a) Integrate $f(z) = x^2 + ixy$ from A (1, 1) to B (2, 4) along

(i) The straight line joining the two points

(ii) The curve c: $x = t, y = t^2$ [4+4=8]

## UNIT – V

Q. 5 (a) Develop the Taylor's series for the function $\frac{z^2 - 1}{(z+2)\ (z+3)}$ where $|z| < 2$ [8]

(b) Evaluate $\int_c \frac{\tan z}{z}\, dz$, where c is the contour $|z| = 2$ [8]

**OR**

Q. 5 (a) Evaluate $\int_c \frac{z^2 e^{zt}}{z^2 + 1}\, dz$ by residue theory, where c is the circle $|z| = 2$ and t is a quantity independent of z. [8]

(b) Evaluate $I = \int_0^{\pi} \frac{a\,d\theta}{a^2 + \sin^2\theta}$, $a > 0$ [8]

--------x--------x--------